MOUNTING HAND GRIP MIMOLIMIT CYLINDRICAL

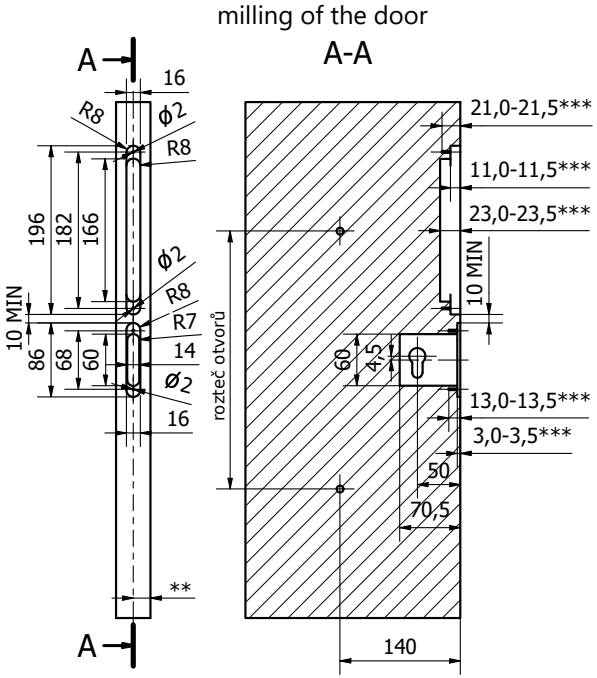

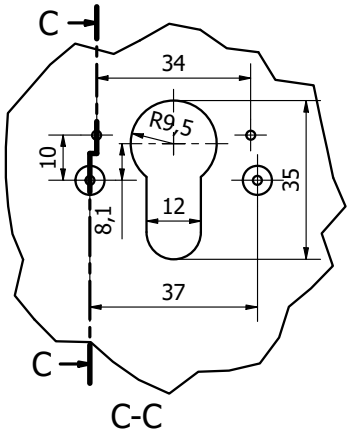

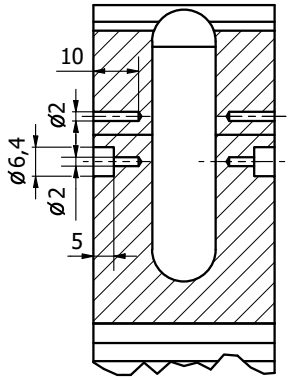

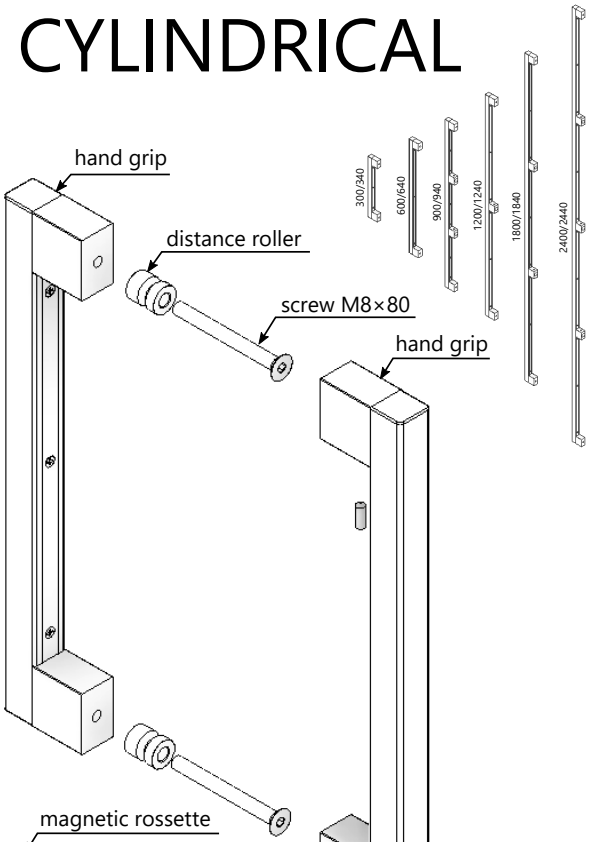

component	quantity
hand grip Mimolimit	2 pcs
distance roller	2 pcs
screw M8×80 mm	2 pcs
set screw M6×8 mm	2 pcs
allen key 3 mm	1 pc
magnetic rosette square cylindrical	2 pcs
inner under rosette of magnetic rosette	2 pcs
screw 3,5×18 mm	8 pcs

pitch / length handrails	number of holes	hole spacing
300/340	2	300
600/640	2	600
900/940	4	300
1200/1240	3	600
1800/1840	4	600
2400/2440	5	600
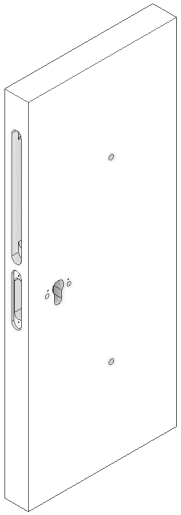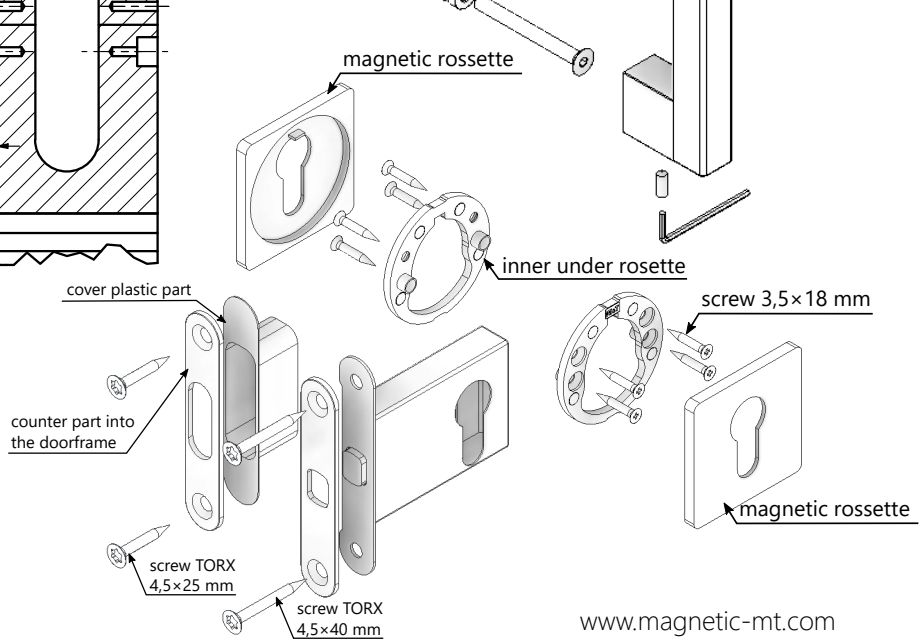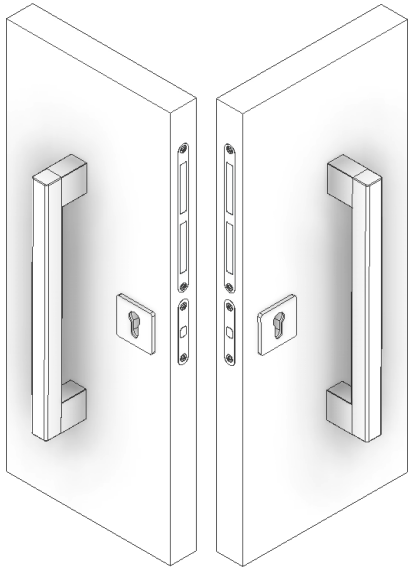
* according to the door manufacturer's custom
** fitting / positioning of the Magnetic block in the door must be solved following the seating of the Magnetic in the doorframe
*** placing of the magnetic block face according to the door manufacturer's custom